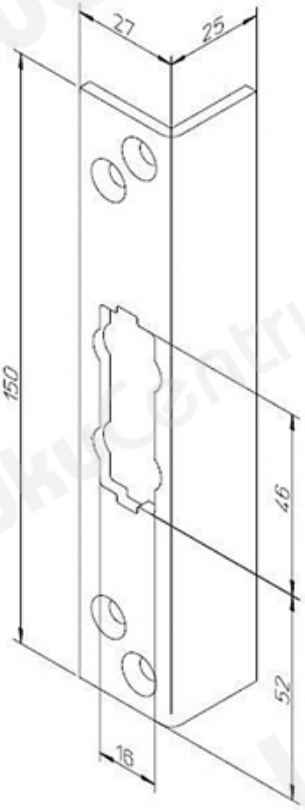TOOTENIMETUS	SOODUS	HIND
Compatible products: 31 Ð?Ñ?Ð²ÐµÑ?Ð½Ñ?Ðµ Ð¿Ð»Ð°Ð½Ðºð¸ ABLOY LP781 Fe/ZL (Ð´Ð»Ñ• Ð´Ð²ÐµÑ?Ð¸)	22.37 ?	22.37 ?