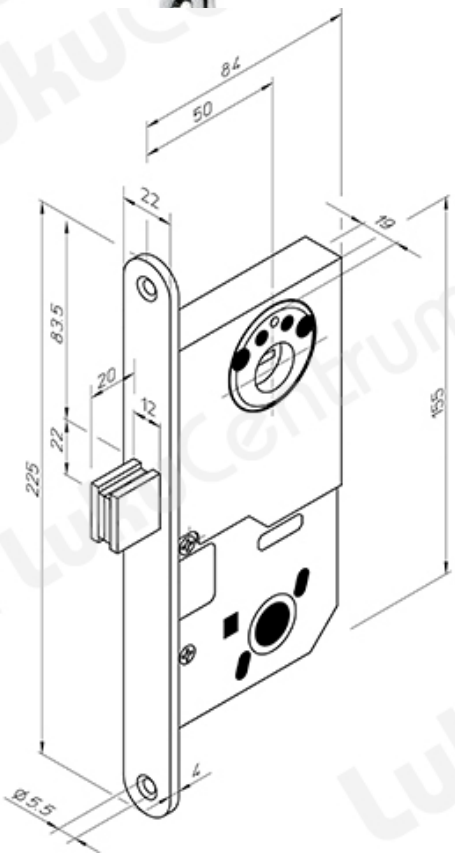TOOTENIMETUS	SOODUS	HIND
Security [illegible] drilling protection	137.36 ?	156.98 ?