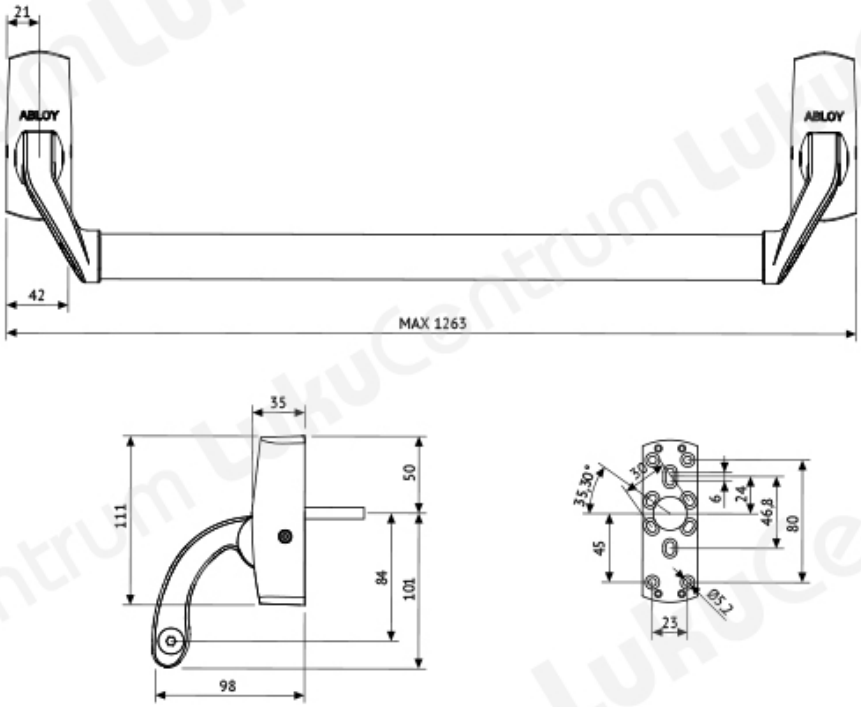TOOTENIMETUS	SOODUS	HIND
Panic bars ABLOY PBE001 (brushed nickel / external link not included)		561.77 ?
Panic bars ABLOY PBE001 (matt chrome / active side)		561.76 ?
Panic bars ABLOY PBE001 (shiny chrome / active side)		550.50 ?
Panic bars ABLOY PBE001 (black / active side)		656.88 ?