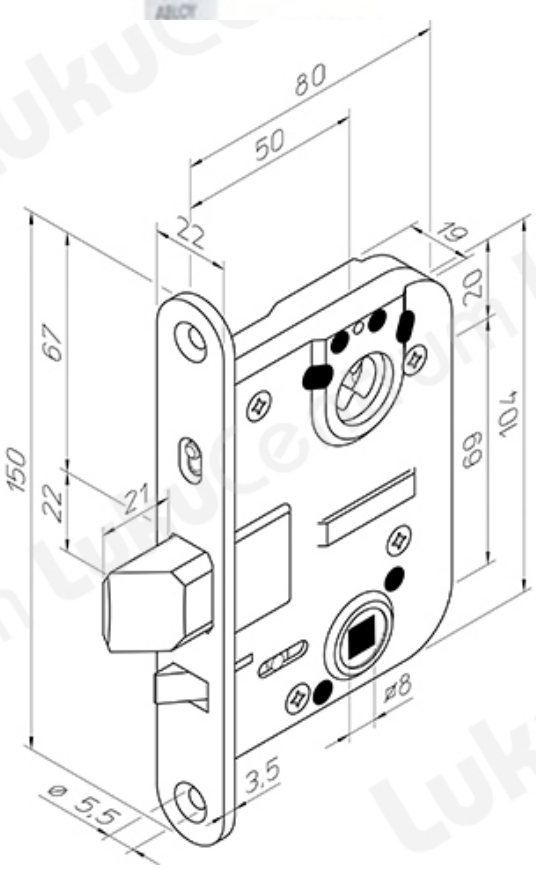TOOTENIMETUS	SOODUS	HIND
[illegible]	[illegible]	[illegible]
Lukukorpus ABLOY 4190/50 Fe/ZL (parem)	62.95 ?	78.68 ?