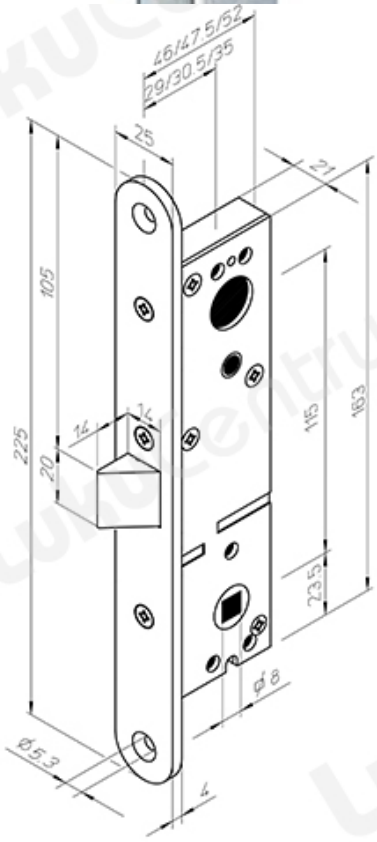TOOTENIMETUS	SOODUS	HIND
Lock case ABLOY LC303/29 FE/ZL (left)		79.07 ?
Lock case ABLOY LC303/29 FE/ZL (right)		79.07 ?
Lock case ABLOY LC303/30,5 FE/ZL (left)		79.07 ?
Lock case ABLOY LC303/30,5 FE/ZL (right)		79.07 ?
Lock case ABLOY LC303/35 FE/ZL (left)		79.07 ?
Lock case ABLOY LC303/35 FE/ZL (right)		79.07 ?