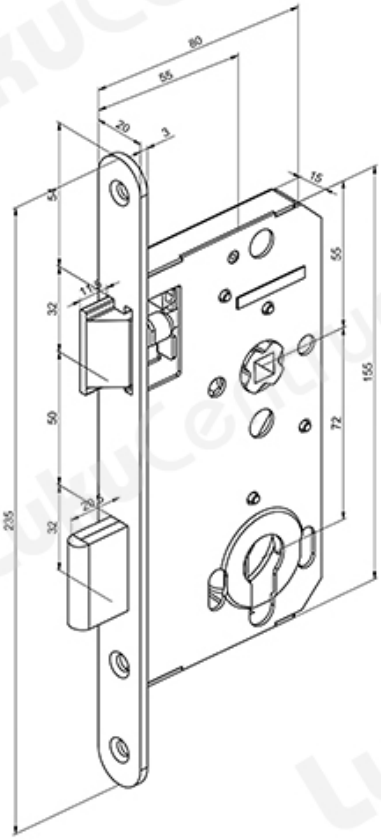TOOTENIMETUS	SOODUS	HIND
Lock case ABLOY 4292/55 Fe/ZL (left)	17.79 ?	20.33 ?
Lock case ABLOY 4292/55 Fe/ZL (right)	17.79 ?	20.33 ?
Lock case ABLOY 4292/55 Fe/MME (left)	17.26 ?	19.73 ?
Lock case ABLOY 4292/55 Fe/MME (right)	17.26 ?	19.73 ?