TOOTENIMETUS	SOODUS	HIND
WC pÃ¶Ã¶r ABLOY LH002 WC Ms/VAL (valge RAL 9010, 40-60 mm uksele)		41.47 ?
WC pÃ¶Ã¶r ABLOY LH002 WC Ms/MU (must RAL 9005, 40-60 mm uksele)		46.47 ?
WC pÃ¶Ã¶r ABLOY LH002 WC Ms/GRA (grafiit RAL 790-M, 40-60 mm uksele)		46.47 ?
WC pÃ¶Ã¶r ABLOY LH002 WC Ms/HAR (hall RAL 9006, 40-60 mm uksele)		44.70 ?
WC pÃ¶Ã¶r ABLOY LH002 WC Ms/HCR (mattkroom, 40-60 mm uksele)		50.58 ?
WC pÃ¶Ã¶r ABLOY LH002 WC L Ms/CR (lÃ¤ikiv kroom, kuni 90 mm uksele)		45.99 ?
WC pÃ¶Ã¶r ABLOY LH002 WC Ms/CR (lÃ¤ikiv kroom, 40-60 mm uksele)		43.55 ?
WC pÃ¶Ã¶r ABLOY LH002 WC Fe/CR (lÃ¤ikiv kroom, 40-60 mm uksele)		25.97 ?
WC pÃ¶Ã¶r ABLOY LH002 WC Ms/HCR (mattkroom, 40-60 mm uksele)		48.09 ?
WC pÃ¶Ã¶r ABLOY LH002 WC Ms/KiLa (poleeritud messing, 40-60 mm uksele)		48.06 ?
WC pÃ¶Ã¶r ABLOY LH002 WC Ms/HaLa (harjatud messing, 40-60 mm uksele)		40.37 ?
WC pÃ¶Ã¶r ABLOY LH002 WC HRV (roostevaba, 40-60 mm uksele)		98.62 ?
WC pÃ¶Ã¶r ABLOY LH002 WC HRV (roostevaba, 40-60 mm uksele)		103.81 ?

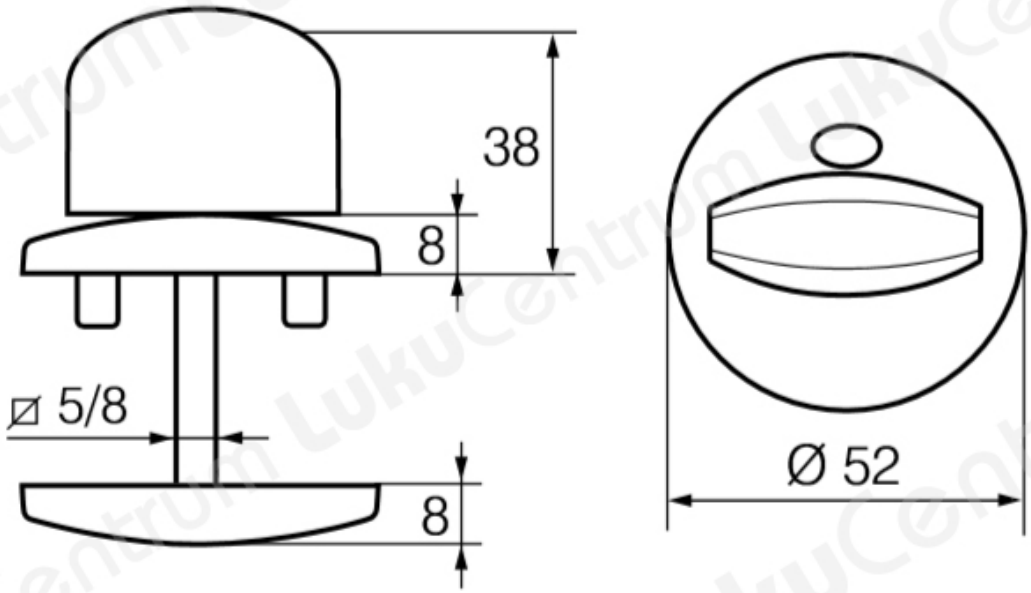

LukuCentrum