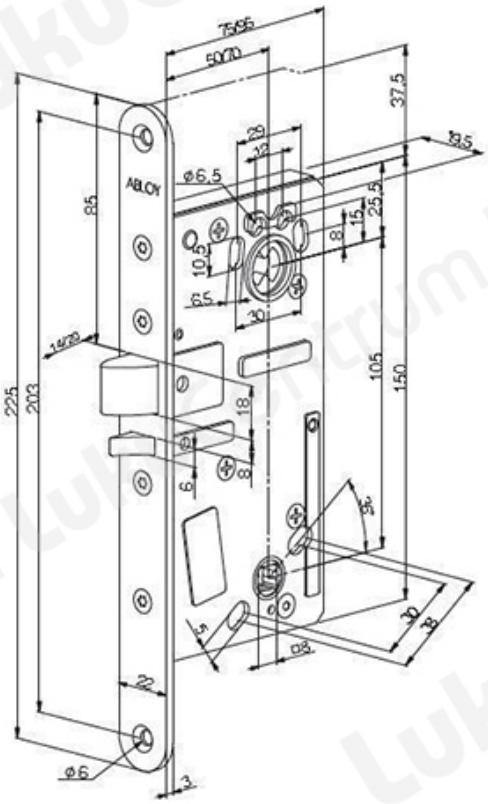| TOOTENIMETUS | SOODUS | HIND |
|---|---|---|
| Solenoid lock Abloy EL582/50 mm | | 520.54 ? |
| Solenoid lock Abloy EL582/70 mm | | 551.24 ? |