TOOTENIMETUS	SOODUS	HIND
Solenoid lock Abloy EL402 with strike plate EAB07		379140,2
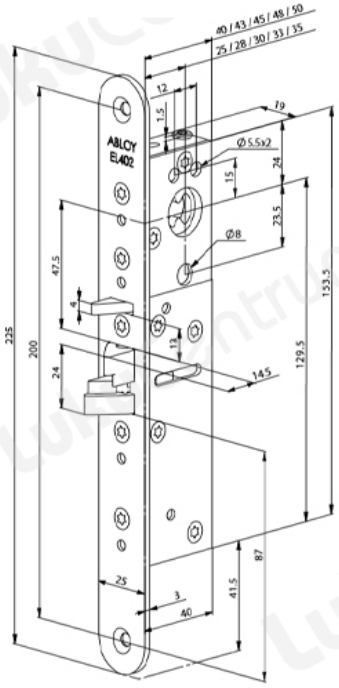
Keyless entry is a growing trend in many industries, including hospitals, schools, and education in buildings. The locks include a special cover with no bolt for quick and easy use and offer a cost-effective way of electric locking without compromising performance. The locks can be controlled by a variety of electrical impulse