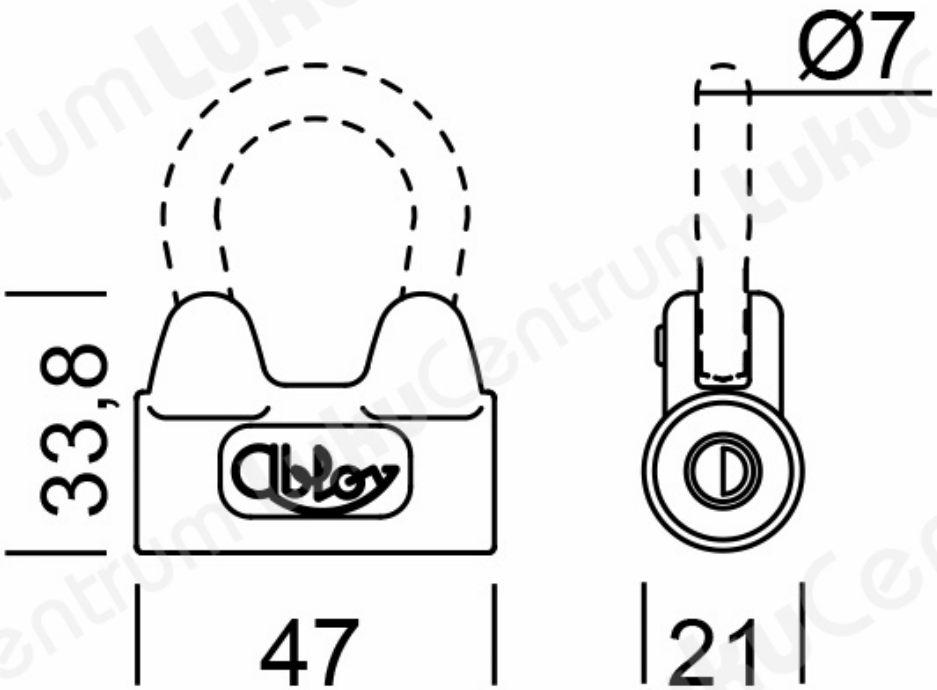TOOTENIMETUS	SOODUS	HIND
Padlock ABLOY 3020/35C Classic (w 2 keys)	31.12 ?	35.56 ?