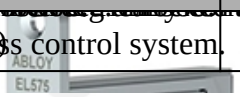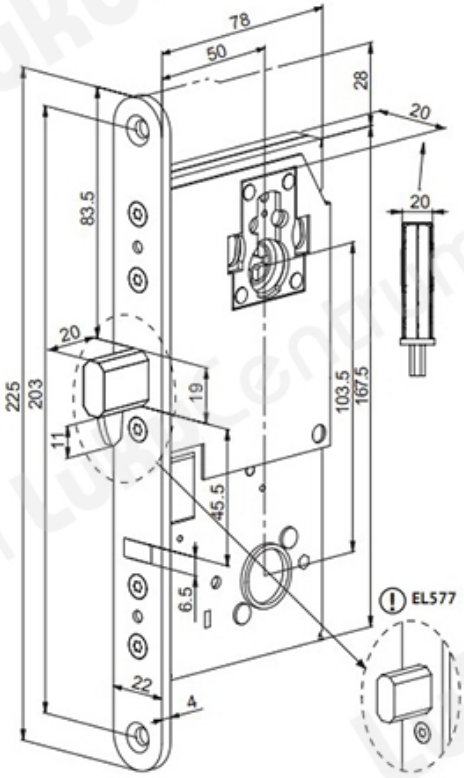TOOTENIMETUS	SOODUS	HIND
Motorlock Abloy EL575 (right-hand control hinges) electrical locking at night time with access control system.	1183.55 ?	1315.05 ?