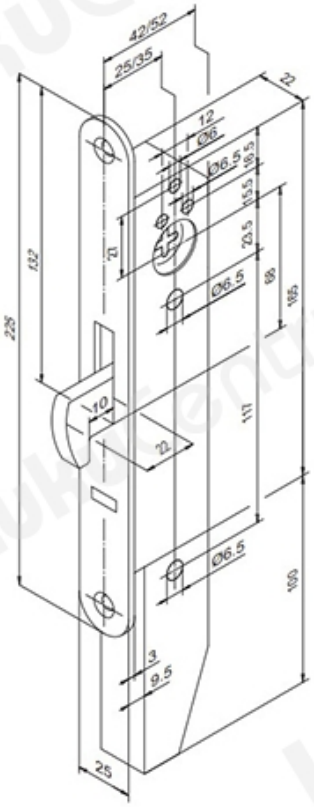TOOTENIMETUS	SOODUS	HIND
Motor lock Abloy EL654/35 EA300 (without control center)		1154.77 ?