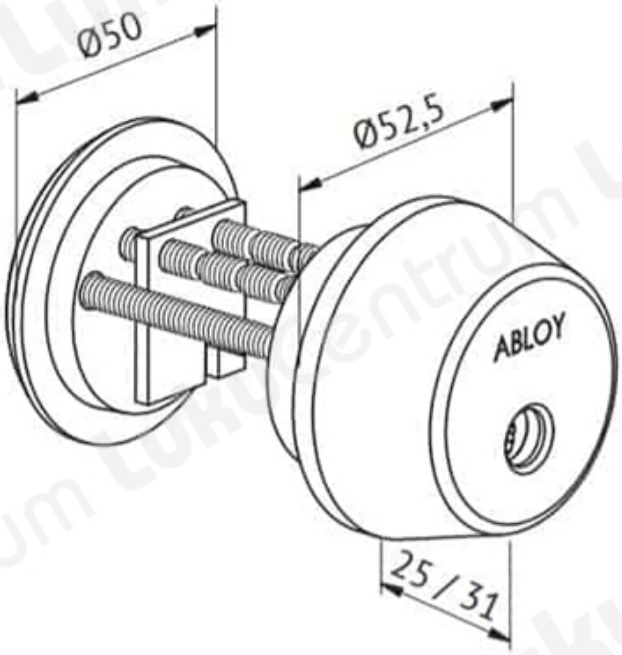TOOTENIMETUS	SOODUS	HIND
Ð¦Ð¸ÐÐ´Ñ?ABLOY CY060U Novel CR (Ð±Ð»ÐµÑ•Ñ?Ñ•Ñ?Ð¸Ð¹ Ñ Ñ?Ð¾Ð¼, c 3 ÐºÐ»Ñ?Ñ?Ð°Ð¼Ð¸)		154.03 ?
Ð¦Ð¸Ð½Ð´Ñ? ABLOY CY060U Novel CR (Ð±Ð»ÐµÑ•Ñ?Ñ•Ñ?Ð¸Ð¹ Ñ Ñ?Ð¾Ð¼, Ð±ÐµÐ· ÐºÐ»Ñ?Ñ?ÐµÐ¹)		108.31 ?
Ð¦Ð»Ð¸Ð½Ð´Ñ? ABLOY CY060U Novel HCR (Ð¼Ð°Ñ?Ð¾Ð²Ñ?Ð¹ Ñ Ñ?Ð¾Ð¼, c 3 ÐºÐ»Ñ?Ñ?Ð°Ð¼Ð¸)		169.46 ?
Ð¦Ð»Ð¸Ð½Ð´Ñ? ABLOY CY060U Novel HCR (Ð¼Ð°Ñ?Ð¾Ð²Ñ?Ð¹ Ñ Ñ?Ð¾Ð¼, Ð±ÐµÐ· ÐºÐ»Ñ?Ñ?ÐµÐ¹)		118.40 ?
Ð¦Ð»Ð¸Ð½Ð´Ñ? ABLOY CY060U Novel NiHa (Ð¼Ð°Ñ?Ð¾Ð²Ñ?Ð¹ Ð½Ð¸ÐºÐµÐ»Ñ?, c 3 ÐºÐ»Ñ?Ñ?Ð°Ð¼Ð¸)		177.23 ?
Ð¦Ð¸Ð½Ð´Ñ? ABLOY CY060U Novel NiHa (Ð¼Ð°Ñ?Ð¾Ð²Ñ?Ð¹ Ð½Ð¸ÐºÐµÐ»Ñ?, Ð±ÐµÐ· ÐºÐ»Ñ?Ñ?ÐµÐ¹)		123.15 ?