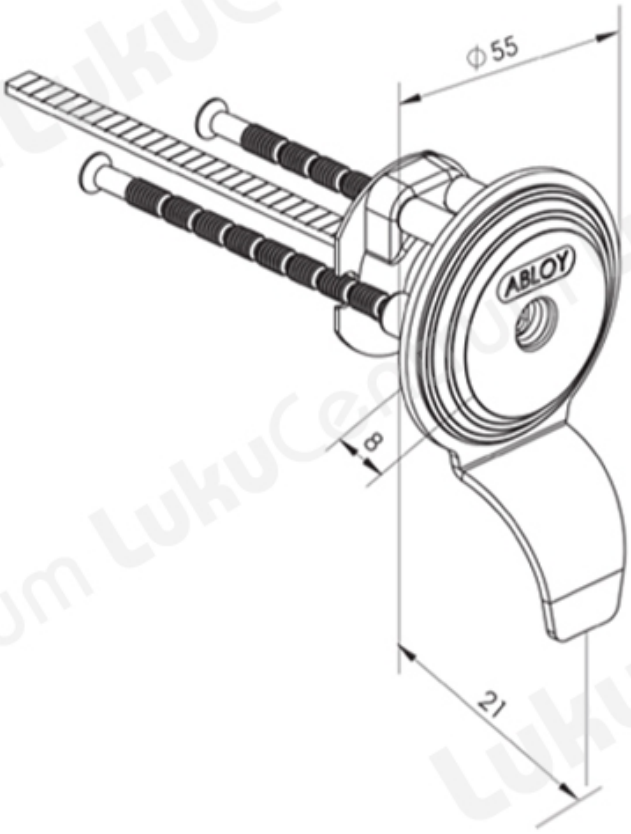TOOTENIMETUS	SOODUS	HIND
Ð¦Ð¸Ð»Ð¸Ð½Ð´Ñ? Ð´Ð»Ñ• Ð½Ð°ÐºÐ»Ð°Ð´Ð½Ñ?Ñ Ð·Ð°Ð¼ÐºÐ¾Ð²Ð² ABLOY 5190C Classic CR (Ð±Ð»ÐµÑ•Ñ?Ñ•Ñ?Ð¸Ð¹ Ñ Ñ?Ð¾Ð¼, c 3 ÐºÐ»Ñ?Ñ?Ð°Ð¼Ð¸)		58.79 ?
Ð¦Ð¸Ð»Ð¸Ð½Ð´Ñ? Ð´Ð»Ñ• Ð½Ð°ÐºÐ»Ð°Ð´Ð½Ñ?Ñ Ð·Ð°Ð¼ÐºÐ¾Ð²Ð² ABLOY 5190C Classic CR (Ð±Ð»ÐµÑ•Ñ?Ñ•Ñ?Ð¸Ð¹ Ñ Ñ?Ð¾Ð¼, Ð±ÐµÐ· ÐºÐ»Ñ?Ñ?ÐµÐ¹)		52.85 ?
Ð¦Ð¸Ð»Ð¸Ð½Ð´Ñ? Ð´Ð»Ñ• Ð½Ð°ÐºÐ»Ð°Ð´Ð½Ñ?Ñ Ð·Ð°Ð¼ÐºÐ¾Ð²Ð² ABLOY 5190C Classic HCR (Ð¼Ð°Ñ?Ð¾Ð²Ñ?Ð¹ Ñ Ñ?Ð¾Ð¼, c 3 ÐºÐ»Ñ?Ñ?Ð°Ð¼Ð¸)		64.59 ?