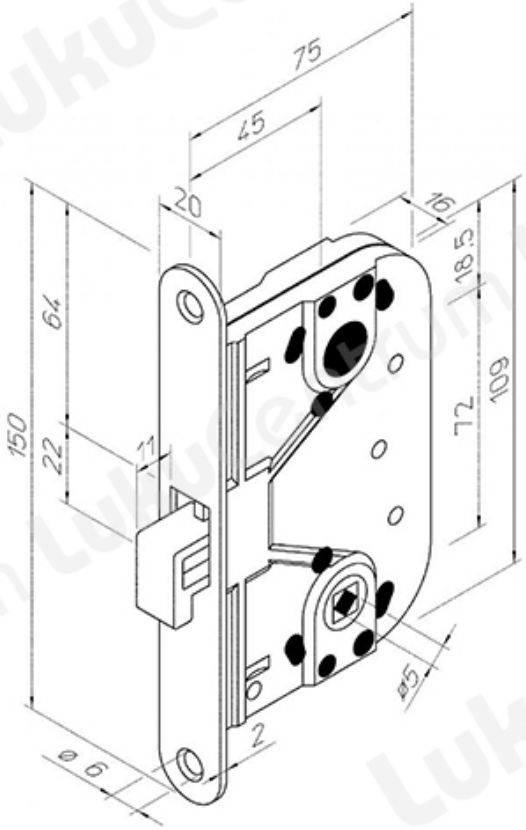TOOTENIMETUS	SOODUS	HIND
[illegible]	[illegible]	[illegible]
Lukukorpus ABLOY 4249 JME	17.97 ?	20.54 ?
Lukukorpus ABLOY 4249 ZN	17.97 ?	20.54 ?