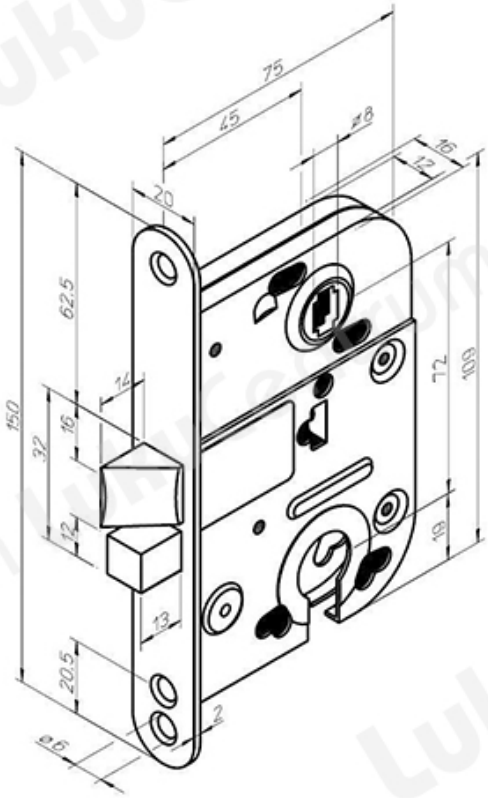TOOTENIMETUS	SOODUS	HIND
[illegible]	[illegible]	[illegible]
Lukukorpus ABLOY 2018 MME (parem, kÃ¤elisus universaalne)	18.69 ?	21.36 ?
Lukukorpus ABLOY 2018 Fe/ZL (parem, kÃ¤elisus universaalne)	18.69 ?	21.36 ?