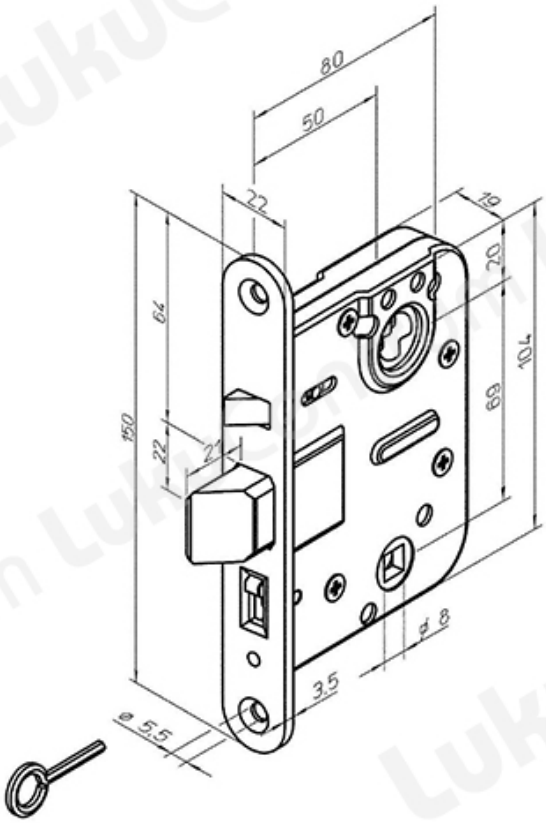TOOTENIMETUS	SOODUS	HIND
[illegible]	[illegible]	[illegible]
Lock case ABLOY LC100/50 Fe/ZL (left)	73.64 ?	84.16 ?
Lock case ABLOY LC100/50 Fe/ZL (right)	73.64 ?	84.16 ?