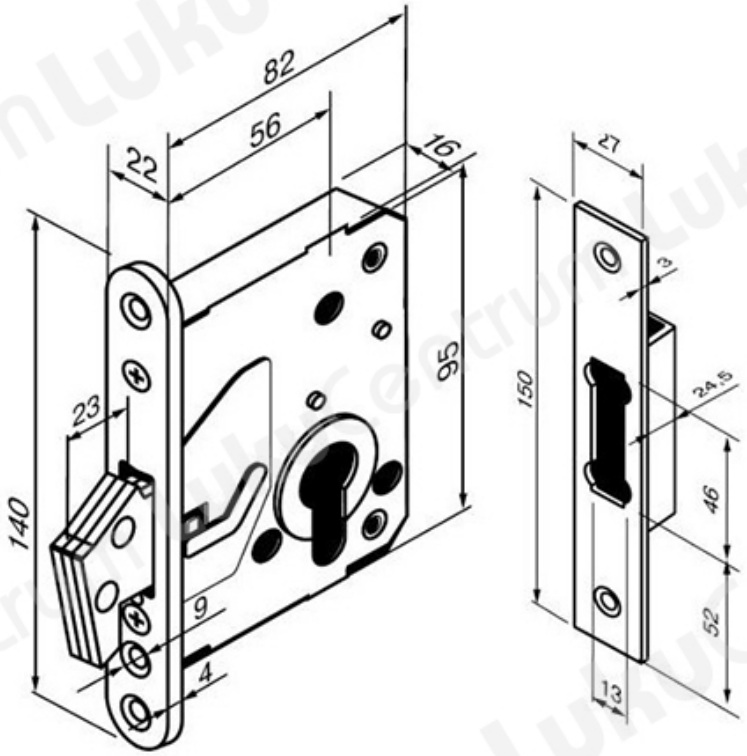TOOTENIMETUS	SOODUS	HIND
[illegible] Lock 360° TABLOY 4232 Fe/ZL. The lock can be used with Europrofile DIN standard fittings.	66.76 ?	76.30 ?