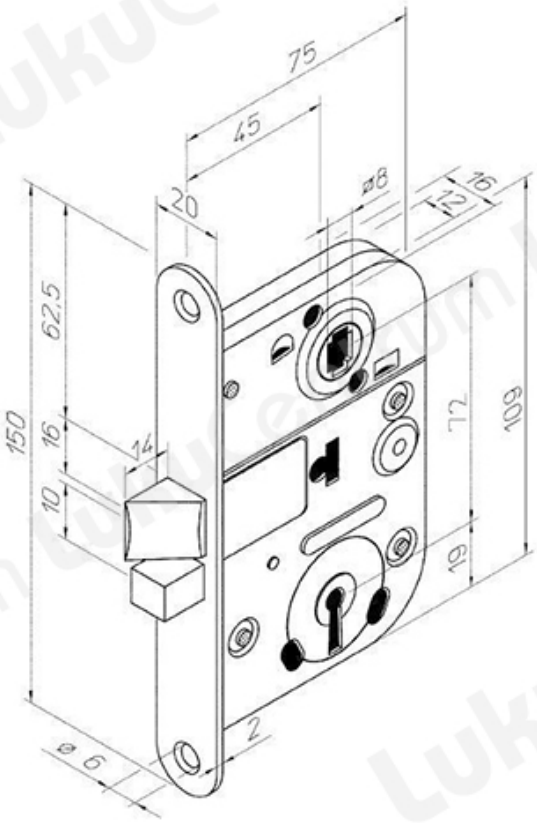| TOOTENIMETUS | SOODUS | HIND |
|---|---|---|
| Lock case ABLOY 2011 JME (handedness is universal) | 40.21 ? | 45.95 ? |
| Lock case ABLOY 2011 ZN (handedness is universal) | 40.21 ? | 45.95 ? |