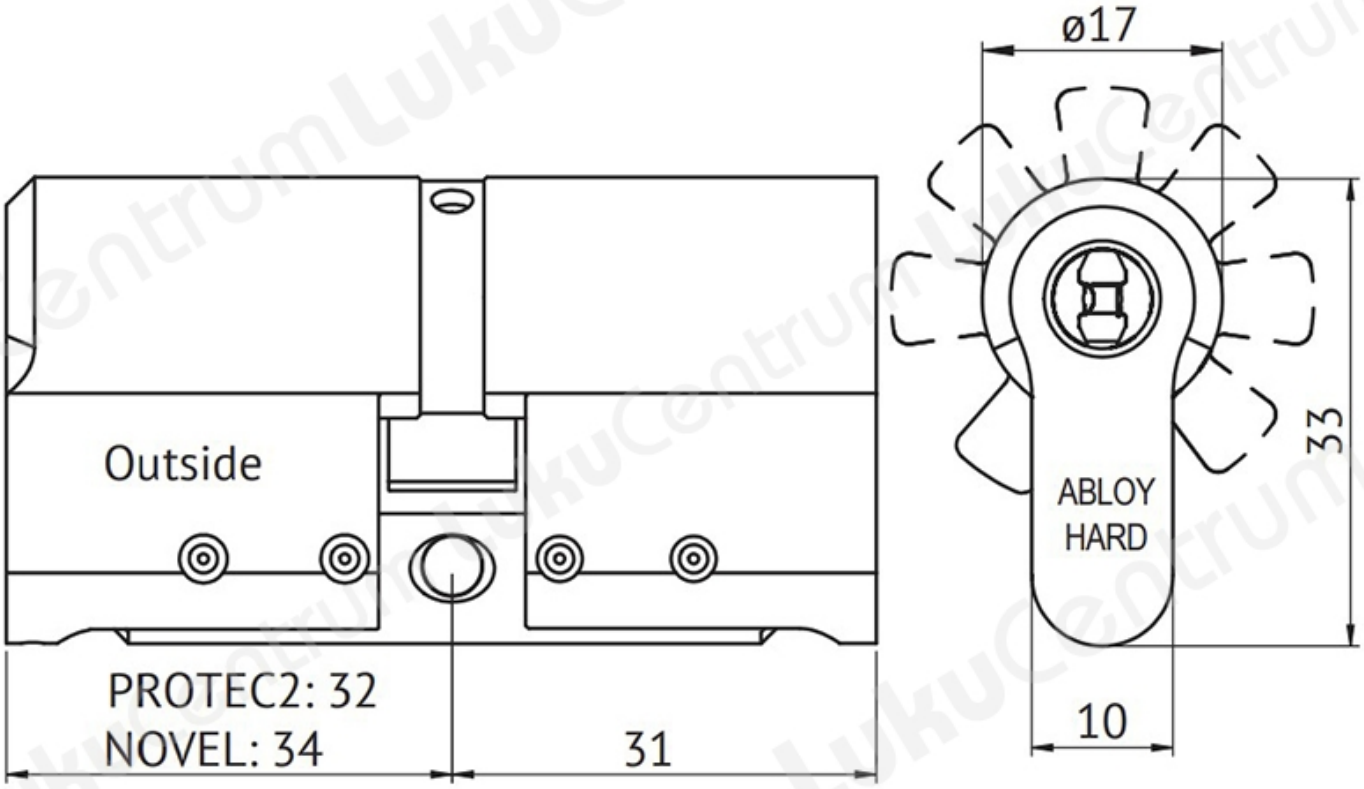TOOTENIMETUS	SOODUS	HIND
EURO Ñ?Ð¸Ð»Ð¸Ð½Ð´Ñ? ABLOY CY332T Protec2 CR (Ð±Ð»ÐµÑ•Ñ?Ñ•Ñ?Ð¸Ð¹ Ñ Ñ?Ð¾Ð¼, 3 ÐºÐ»Ñ?Ñ?Ð°Ð¼Ð¸)		174.16 ?
EURO Ñ?Ð¸Ð»Ð¸Ð½Ð´Ñ? ABLOY CY332T Protec2 CR (Ð±Ð»ÐµÑ•Ñ?Ñ•Ñ?Ð¸Ð¹ Ñ Ñ?Ð¾Ð¼, Ð±ÐµÐ· ÐºÐ»Ñ?Ñ?ÐµÐ¹)		113.02 ?
EURO Ñ?Ð¸Ð»Ð¸Ð½Ð´Ñ? ABLOY CY332T Protec2 HCR (Ð¼Ð°Ñ?Ð¾Ð²Ñ?Ð¹ Ñ Ñ?Ð¾Ð¼, 3 ÐºÐ»Ñ?Ñ?Ð°Ð¼Ð¸)		191.65 ?
EURO Ñ?Ð¸Ð»Ð¸Ð½Ð´Ñ? ABLOY CY332T Protec2 HCR (Ð¼Ð°Ñ?Ð¾Ð²Ñ?Ð¹ Ñ Ñ?Ð¾Ð¼, Ð±ÐµÐ· ÐºÐ»Ñ?Ñ?ÐµÐ¹)		118.74 ?