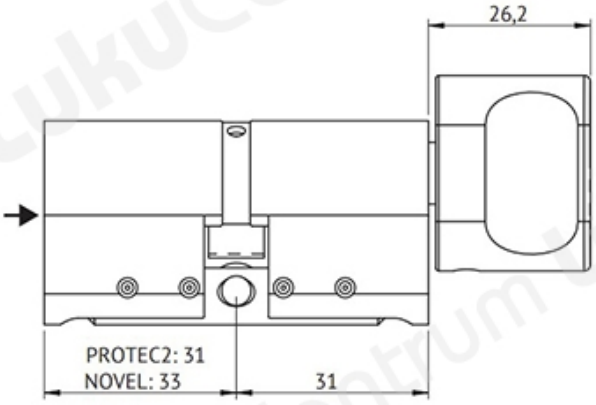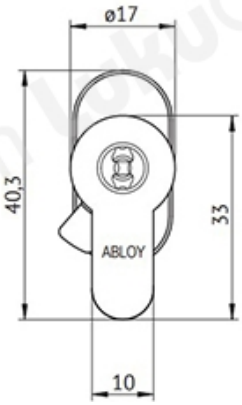TOOTENIMETUS	SOODUS	HIND
EURO lukusÃ¼damik ABLOY CY323U Novel CR (lÃ¤ikiv kroom, 3 vÃµtmega)		135.07 ?
EURO lukusÃ¼damik ABLOY CY323U Novel CR (lÃ¤ikiv kroom, vÃµtmeteta)		88.16 ?
EURO lukusÃ¼damik ABLOY CY323U Novel HCR (mattkroom, 3 vÃµtmega)		148.56 ?
EURO lukusÃ¼damik ABLOY CY323U Novel HCR (mattkroom, vÃµtmeteta)		96.90 ?
EURO lukusÃ¼damik ABLOY CY323U Novel Ms/KiLa (poleeritud messing, 3 vÃµtmega)		166.77 ?
EURO lukusÃ¼damik ABLOY CY323U Novel MS/HaLa (harjatud messing, 3 vÃµtmega)		166.77 ?
EURO lukusÃ¼damik ABLOY CY323U Novel MS/HaLa (harjatud messing, vÃµtmeteta)		117.32 ?
EURO lukusÃ¼damik ABLOY CY323U Novel NiHa (harjatud nikkel, 3 vÃµtmega)		158.32 ?
EURO lukusÃ¼damik ABLOY CY323U Novel NiHa (harjatud nikkel, vÃµtmeteta)		103.32 ?