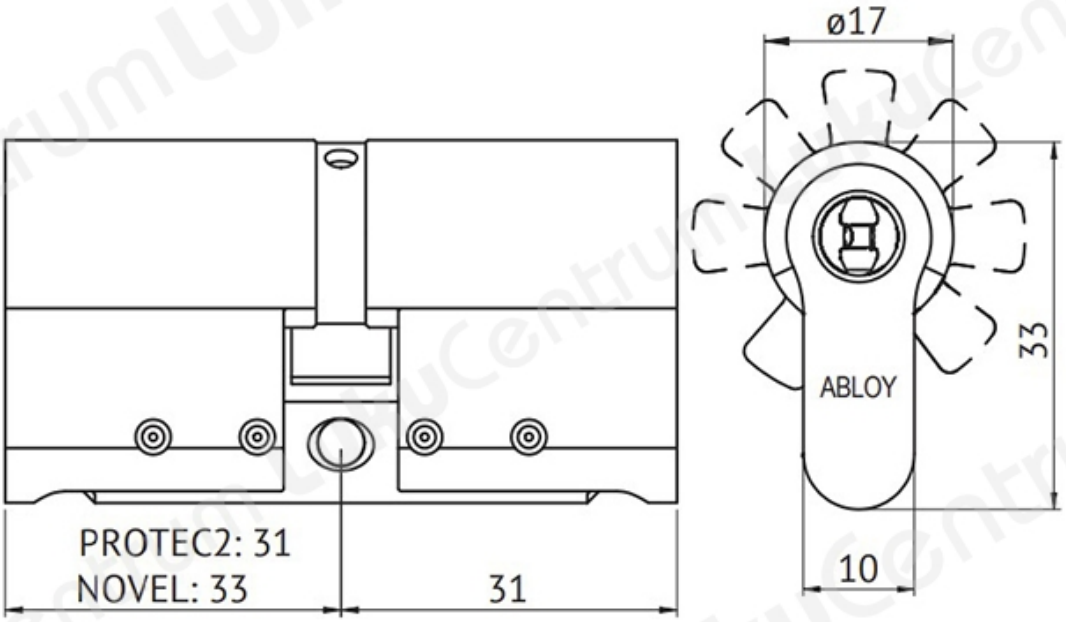TOOTENIMETUS	SOODUS	HIND
EURO lukusÃ¼damik ABLOY CY322U Novel CR (lÃ¤ikiv kroom, 3 vÃµtmega)		148.01 ?
EURO lukusÃ¼damik ABLOY CY322U Novel CR (lÃ¤ikiv kroom, vÃµtmeteta)		100.71 ?
EURO lukusÃ¼damik ABLOY CY322U Novel HCR (mattkroom, 3 vÃµtmega)		162.75 ?
EURO lukusÃ¼damik ABLOY CY322U Novel HCR (mattkroom, vÃµtmeteta)		110.74 ?
EURO lukusÃ¼damik ABLOY CY322U Novel Ms/KiLa (poleeritud messing, 3 vÃµtmega)		177.56 ?
EURO lukusÃ¼damik ABLOY CY322U Novel Ms/KiLa (poleeritud messing, vÃµtmeteta)		120.83 ?
EURO lukusÃ¼damik ABLOY CY322U Novel MS/HaLa (harjatud messing, 3 vÃµtmega)		177.56 ?
EURO lukusÃ¼damik ABLOY CY322U Novel MS/HaLa (harjatud messing, vÃµtmeteta)		120.83 ?
EURO lukusÃ¼damik ABLOY CY322U Novel NiHa (harjatud nikkel, 3 vÃµtmega)		170.13 ?
EURO lukusÃ¼damik ABLOY CY322U Novel NiHa (harjatud nikkel, vÃµtmeteta)		115.78 ?