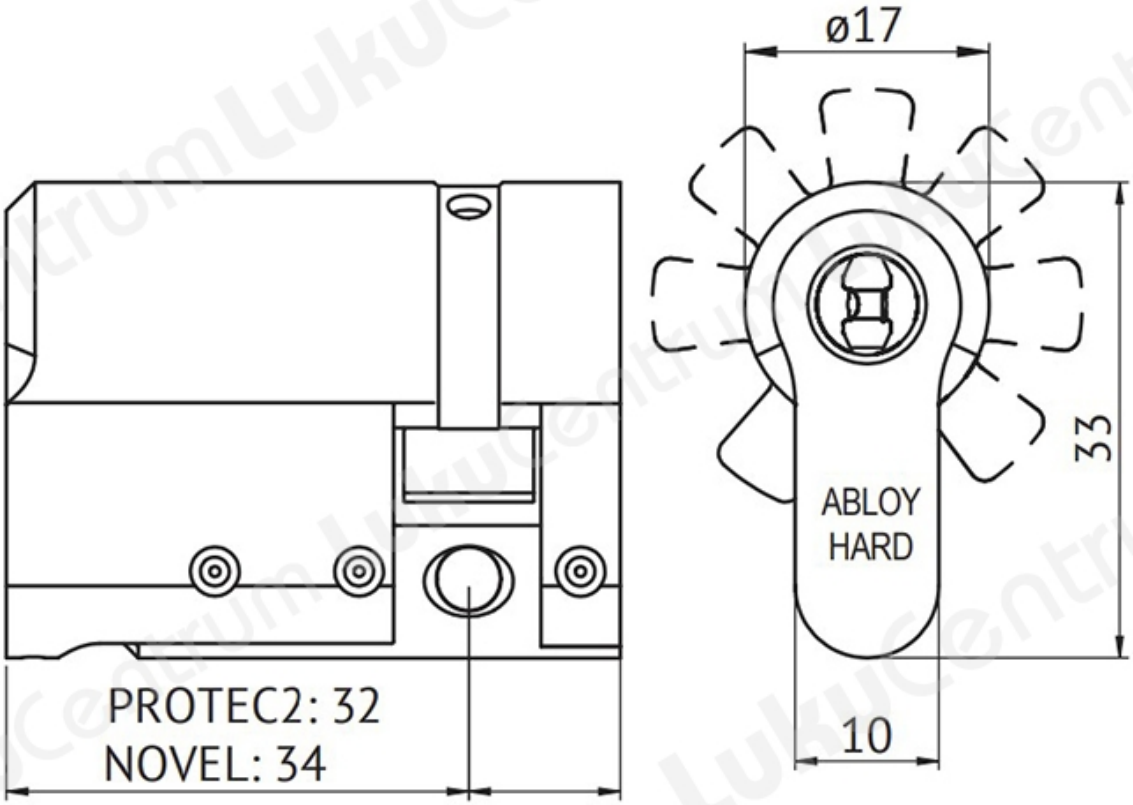TOOTENIMETUS	SOODUS	HIND
EURO cylinder ABLOY CY331U Novel CR (bright chrome, w 3 keys)		167.58 ?
EURO cylinder ABLOY CY331U Novel CR (bright chrome, w/o keys)		119.68 ?