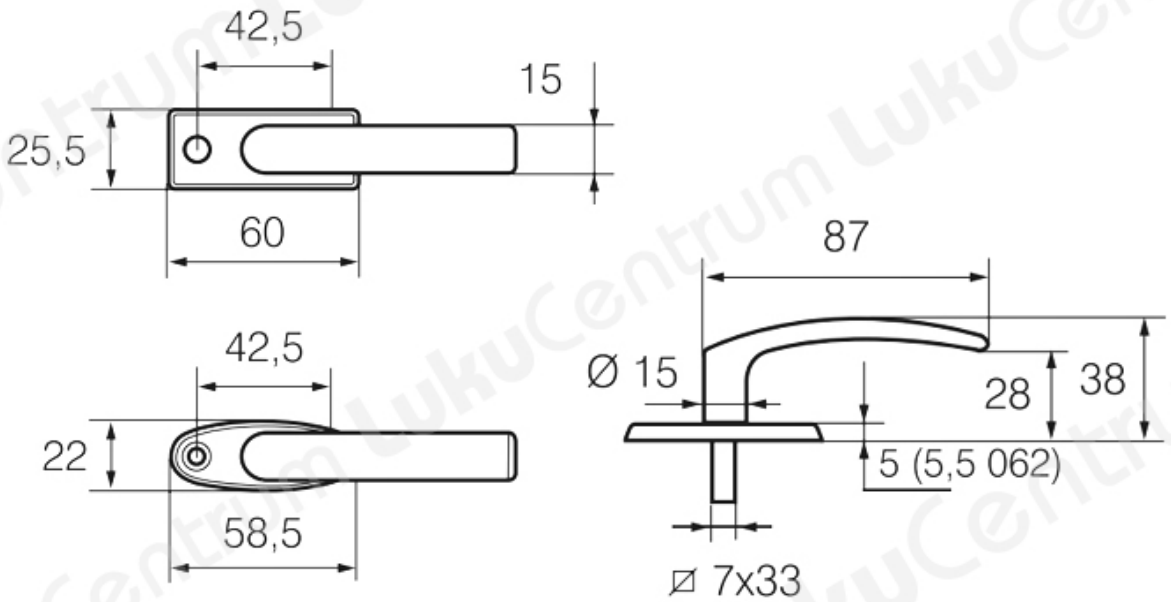| TOOTENIMETUS | SOODUS | HIND |
|---|---|---|
| Ð?ÐºÐ¾Ð½Ð½Ð°Ñ• Ñ?Ñ?Ñ?ÐºÐ° ABLOY WF56/152 Zn/CR (Ð±Ð»ÐµÑ•Ñ?Ñ•Ñ?Ð¸Ð¹ Ñ Ñ?Ð¾Ð¼, 40 Ð¼Ð¼, Ð±ÐµÐ· Ð²Ð¸Ð½Ñ?Ð¾Ð²) | | 7.60 ? |
| Ð?ÐºÐ¾Ð½Ð½Ð°Ñ• Ñ?Ñ?Ñ?ÐºÐ° ABLOY WF56/152 Zn/CR (Ð±Ð»ÐµÑ•Ñ?Ñ•Ñ?Ð¸Ð¹ Ñ Ñ?Ð¾Ð¼, 40 Ð¼Ð¼) | | 10.89 ? |
| Ð?ÐºÐ¾Ð½Ð½Ð°Ñ• Ñ?Ñ?Ñ?ÐºÐ° ABLOY WF56/152 Zn/VAL (Ð±ÐµÐ»Ñ?Ð¹ RAL 9010, 40 Ð¼Ð¼, Ð±ÐµÐ· Ð²Ð¸Ð½Ñ?Ð¾Ð²) | | 10.16 ? |
| Ð?ÐºÐ¾Ð½Ð½Ð°Ñ• Ñ?Ñ?Ñ?ÐºÐ° ABLOY WF56/152 Zn/VAL (Ð±ÐµÐ»Ñ?Ð¹ RAL 9010, 40 Ð¼Ð¼) | | 10.81 ? |