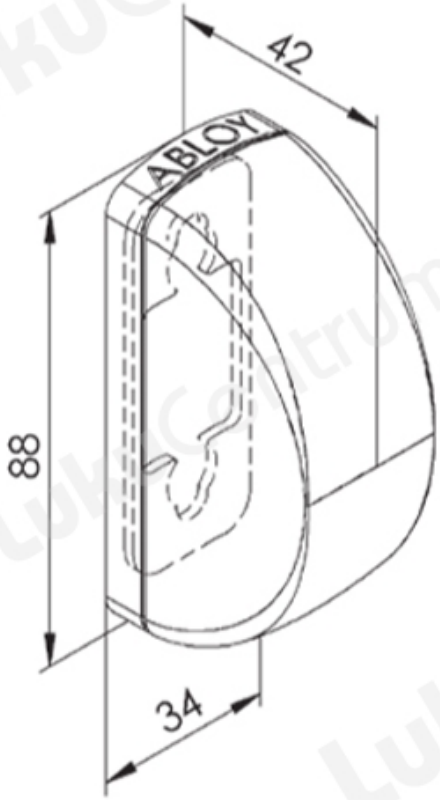TOOTENIMETUS	SOODUS	HIND
Dome + lifting plate ABLOY CH018		19.28 ?